Intelligent three-phase AC voltage regulator module

A: Product Description

SLTYA intelligent three-phase AC voltage regulator module, containing three potential detection, constant current source, linear amplifier, phase shifter, PI control, power amplifier, pulse shaping, high frequency pulse transformer isolation trigger and three sets of inverse parallel controllable silicon chip integration, control loop (weak electric part) and the load loop (high voltage) implementation full isolation, you can use the 10K potentiometer or 1~5V voltage signal control, to change the conduction angle of the thyristor, can realize three-phase load voltage from 0V to full voltage adjustable stepless.

B: the main technical parameters

1, the main circuit voltage: 24~480VAC
2, the input DC power supply: 12VDC (10W)
3, adjustment range: 0~180 °
4, a regulating potentiometer potentiometer: 10K
5, the input control: 1~5VDC
6, the environment temperature: -10~45 ℃

C: Dimensions and connection as shown below
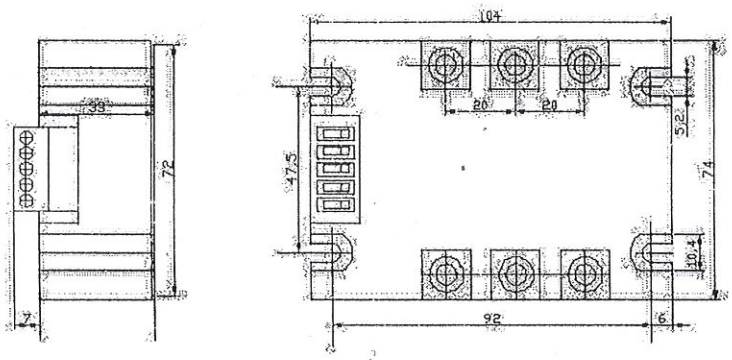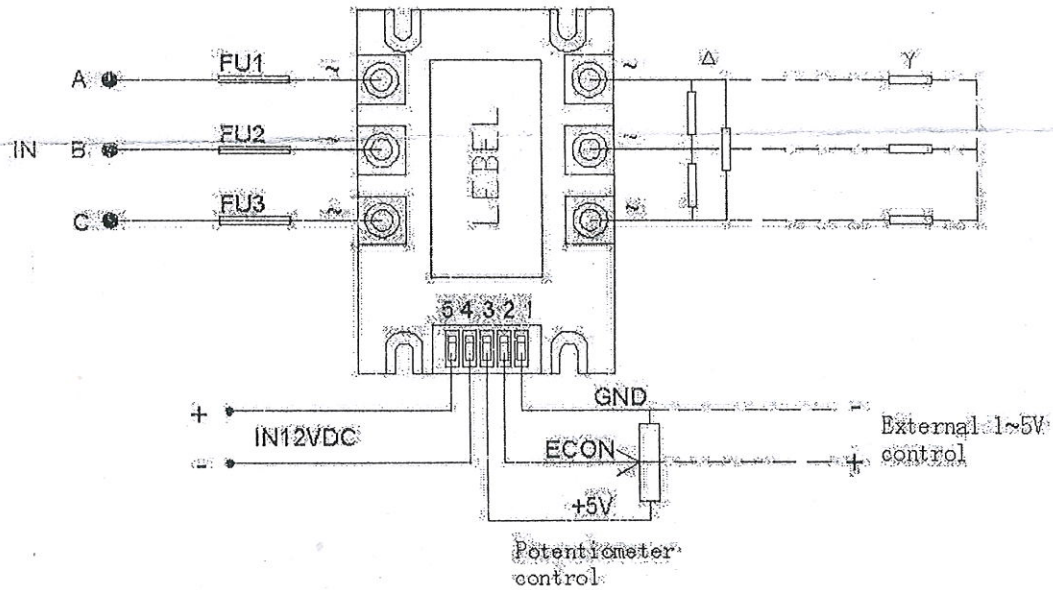
Unit(mm)